RoHS compliant

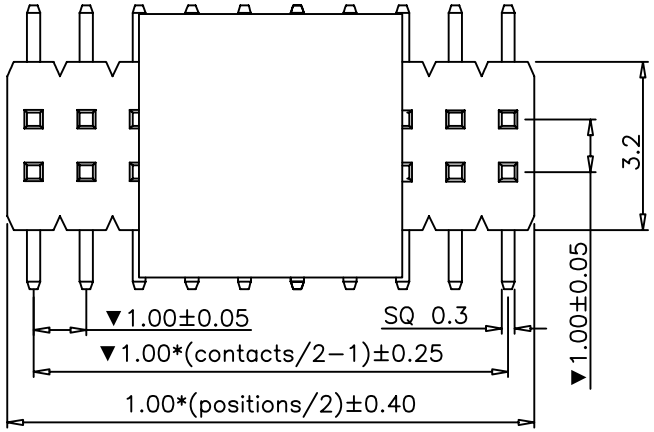

Specification

1.Material:

1.1 Contact:Phosphor bronze,selective plating

1.2 Insulator:PA6T,black,UL94V-0,RoHS

2.Electrical:

2.1 Current rating:0.75Amps/contact max.

2.2 Contact resistance: ≤30mΩ/contact

2.3 Insulation resistance: ≥1000MΩ at V=100V

2.4 Withstanding Voltage:500V AC/minute

3.Mechanical:

3.1 Retention force:0.3Kgf/contact min.

3.2 Operaing temperature: -55°C to+105°C

3.3 Mate with FCA/B/D2 series

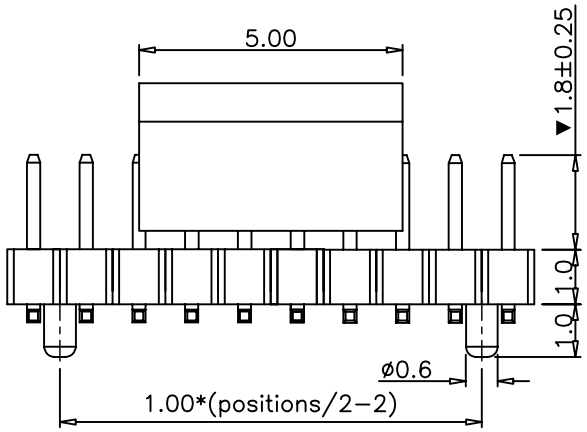

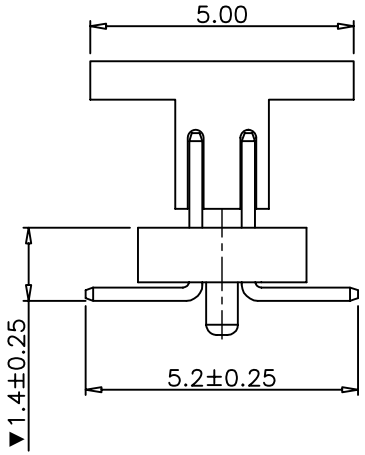

Recommended PCB Layout

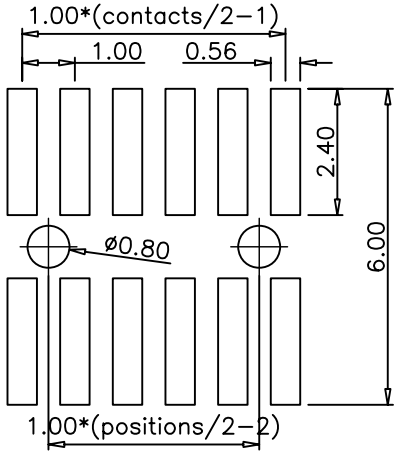

Ordering Information

PH100010S - 2XX X X X 01P - 0180 - 0140 - 0520

- 2XX: No. of pins 2*2-2*50
- X: Plating Option
  - A = Gold Flash
  - B = 3U" Gold
  - C = 5U" Gold
  - E = 15U" Gold
  - T = Tin
  - Z = Special
- X: Insulator Material Option
  - A = PBT
  - B = PA6T
  - F = LCP
  - Z = Special
- X: Packing Option
  - A = Tray
  - B = Bag
  - C = Tube
  - Z = Special
- 01P
- 0180: PA Length
  - 0600 = 6.00mm
  - 2500 = 25.0mm
- 0140: PB Length
  - 0900 = 9.00mm
  - 1500 = 15.0mm
- 0520: PC Length
  - 0900 = 9.00mm
  - 1500 = 15.0mm

Fortune Star Fortune Star Technical Co., Limited

TITLE:	1.0mm Pin Header Dual row SMT						
TOLERANCES UNLESS OTHERWISE SPECIFIED:	DRAWN	Robert	DATE: 2012-03-28	DRAWING NO.: PH100010S-2XX-01P			
X.XX ±0.25 X.X ±0.35 X. ±0.50 X.X° ±2° X.° ±3°	CHECKED	Jhon	PROJECTION				
	APPROVED	Jack	SIZE: A4	UNIT: MM	SCALE: 1:1	SHEET: 1/1	REV: A