RoHS compliant

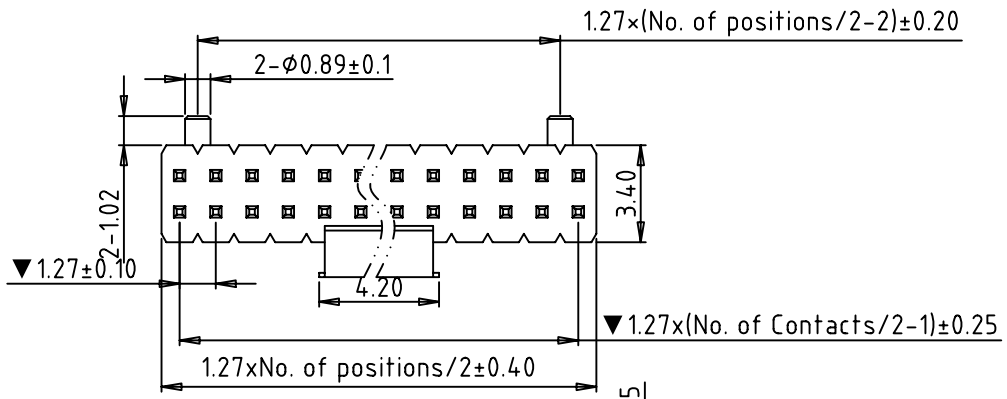

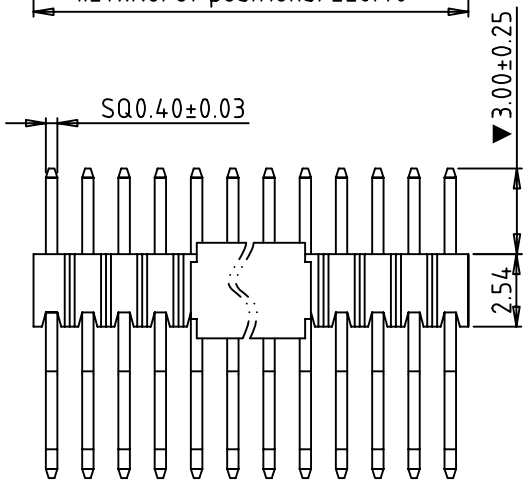

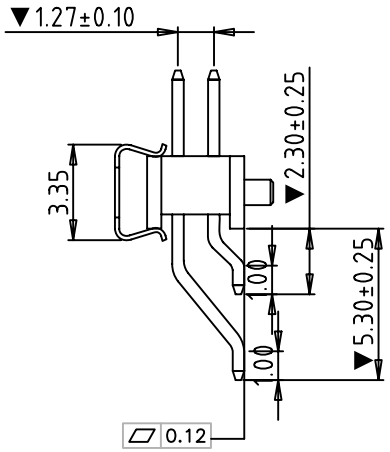

Specification

1.Material:

1.1 Contact:Phosphor bronze,selective plating

1.2 Insulator:PA6T,black,UL94V-0,RoHS

2.Electrical:

2.1 Current rating:1Amps/contact max.

2.2 Contact resistance: ≤20mΩ/contact

2.3 Insulation resistance: ≥1000MΩ at V=100V

2.4 Withstanding Voltage:300V AC/minute

3.Mechanical:

3.1 Retention force:0.35Kgf/contact min.

3.2 Operaing temperature: -55°C to+105°C

3.3 Soldering temperture: 260°C 5S

Recommended PCB Layout

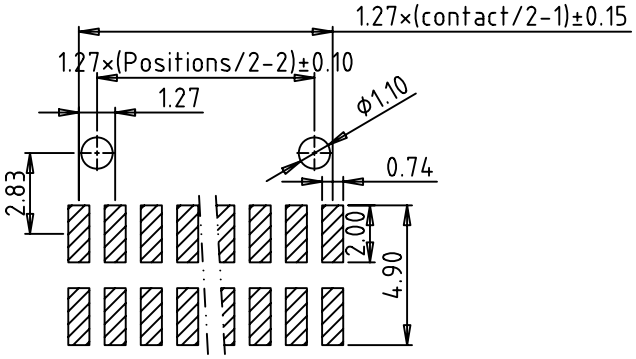

Recommended P.C.B Layout(±0.05)

Ordering Information

PH1270254HS - 2XX X X X 01P - 0300 - 0254 - 0530

- 2XX: No. of pins 2*2-2*50
- X (Plating Option): A = Gold Flash; B = 3U" Gold; C = 5U" Gold; E = 15U" Gold; T = Tin; Z = Special
- X (Insulator Material Option): A = PBT; B = PA6T; F = LCP; Z = Special
- X (Packing Option): A = Tray; B = Bag; C = Tube; Z = Special
- 01P (No. of Insulator): 01 = 1 Insulator; 02 = 2 Insulators; 03 = 3 Insulators
- 0300 (PA Length): 0600 = 6.00mm; 2500 = 25.0mm
- 0254 (PB Length): 0900 = 9.00mm; 1500 = 15.0mm
- 0530 (PC Length): 0900 = 9.00mm; 1500 = 15.0mm

Fortune Star Fortune Star Technical Co., Limited

TITLE:	1.27mm Pin Header Single Horizontal SMT				
TOLERANCES UNLESS OTHERWISE SPECIFIED:	DRAWN	Robert	DATE: 2012-03-28	DRAWING NO.:	PH1270254HS-2XX-01P
X.XX ±0.25, X.X ±0.35, X. ±0.50; X.X° ±2°, X.° ±3°	CHECKED	Jhon	PROJECTION		
	APPROVED	Jack	SIZE: A4 / UNIT: MM	SCALE: 1:1 / SHEET: 1/1	REV: A